NetVanta Series
(with E1/FE1 or E1/FE1 + G.703 Drop Network Interface Module)

Quick Configuration Guide 64200868L1-42C March 2005

Equipment Required

- Category 5 - UTP cable for connecting the system to the existing network.
- VT100 terminal or PC with VT100 emulation software.
- DB-9 (male) to DB-9 (female) straight-through cable for configuring the unit.

NOTE

This quick configuration guide provides step-by-step instructions for configuring your application. The configuration scripts are available on the ADTRAN OS Documentation CD.

*The configuration parameters used in the example outlined in this document are for instructional purposes only. Please replace all underlined entries (**example**) with your specific parameters to configure your application.*

Network Diagrams

Frame Relay Diagram

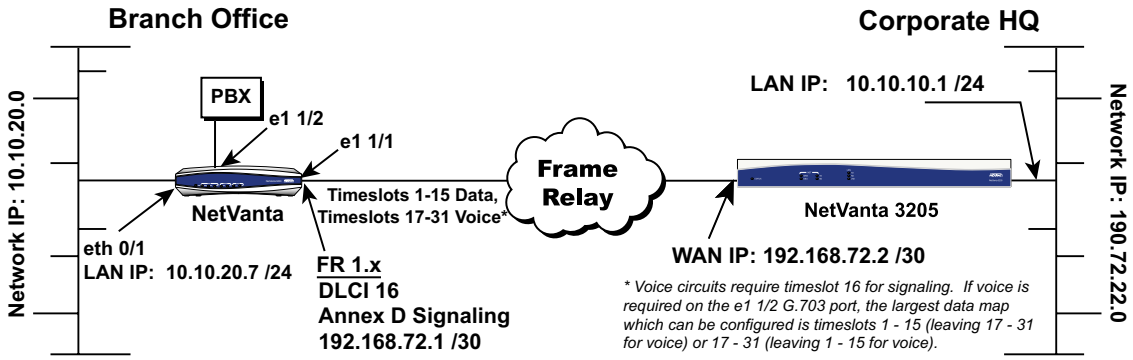

PPP over Fractional E1 Connection Diagram

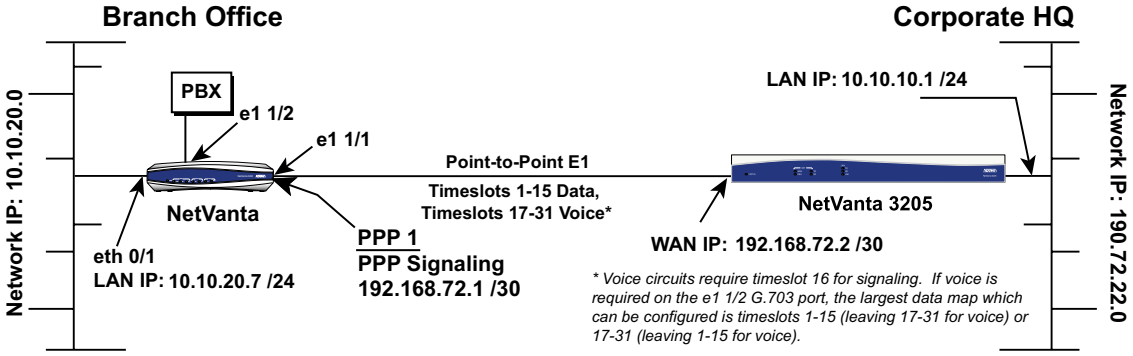

Configure the Unit

The NetVanta may be initially accessed and managed either via a console session or through a Telnet session. Refer to *Initiate a Console Session* for console session instructions. Initiating a Telnet session requires using a hub and two Ethernet cables (one for the PC and one for the unit). The default Ethernet IP address is 10.10.10.1. Refer to *Configure Telnet Access* on page 7 to change Telnet session settings.

Initiate a Console Session

1. Connect a VT100 terminal (or PC with VT100 emulation software) to the NetVanta **CONSOLE** port using a DB-9 (male) to DB-9 (female) straight-through serial cable.
2. Configure the COM port with the following parameters:

   Data Rate: 9600
   Data Bits: 8
   Parity Bits: None
   Stop Bits: 1
   Flow Control: None
3. Open a VT100 terminal session. (Please refer to the appropriate VT100 terminal software documentation for detailed instructions.)
4. Press the **<Enter>** key.
5. Enter **enable** at the **>** prompt.
6. Enter the password when prompted. The default password is **password**.
7. You are now at the **#** prompt. At the **#** prompt, enter **config terminal** to enter the Global Configuration mode.

Configure the Ethernet Port Parameters

1. At the **(config)#** prompt, enter **interface eth 0/1** to access the configuration parameters for the Ethernet port located on the rear panel of the unit.
2. Enter **ip address 10.10.20.7 255.255.255.0** to assign an IP address to the Ethernet port using a 24-bit subnet mask.

> **NOTE** *If you are accessing the NetVanta via Telnet, once you change this IP address, you will lose connection to the NetVanta. You must change the IP address of your PC before you can proceed.*

> **NOTE** *ADTRAN recommends that you set the Ethernet speed and duplex to match the switch or hub it is plugged in to.*
>
> *For example:* (config-eth 0/1)**#speed 10**
>
> (config-eth 0/1)**#half-duplex**

3. Enter **no shutdown** to activate the interface to pass data.
4. Enter **exit** to exit the Ethernet interface commands and return to the Global Configuration mode.

> *The NetVanta Network Interface Modules (NIMs) use a* **slot/port** *notation for interface identification. All non-modular interfaces built into the base unit (e.g., the Ethernet port) are identified using* **0** *as the slot number.*

Begin the E1 Network Interface Configuration

1. At the **(config)#** prompt, enter **interface e1 1/1** to activate the interface configuration mode for the E1 network interface.
2. If necessary (this is the default), enter **clock source line** to configure the unit to recover clocking from the E1 network connection.

> *You should only need to change this setting for PPP, which will have one end set to* **line** *(default) and the other end set to* **internal***.*

3. If two units are configured on a private E1 (PPP mode), set one unit to **clock source line** and the other to **clock source internal**. For Frame Relay, set both ends to **clock source line**.

Create the E1 Interface TDM Group

The following steps demonstrate configuring an E1 network interface with timeslots 1 through 15 for data.

1. At the **(config-e1 1/1)#** prompt, enter **framing crc4**.
2. Enter **sa4tx-bit 0**.
3. Enter **tdm-group 1 timeslots 1-15 speed 64** to create a TDM group for timeslots 1 through 15 (the data timeslots) on the E1 network connection (e1 1/1).
4. Enter **no shutdown** to activate the interface.
5. Enter **interface e1 1/2** to activate the interface configuration mode for the G.703 network interface.
6. Enter **no shutdown** to activate the interface.
7. Enter **exit** to return to the Global Configuration mode.

> *The NetVanta automatically maps timeslots 1 through 31 from the network connection of the E1/FE1 + G.703 NIM to the G.703 port. Creating a TDM group removes the specified timeslots from the G.703 map. All remaining timeslots not included in the TDM group will be passed from the network port (e1 1/1) to the G.703 port (e1 1/2).*

> *Voice circuits require timeslot 16 for signaling. If voice is required on the e1 1/2 G.703 port, the largest data map which can be configured is timeslots 1 through 15 (leaving 17 through 31 for voice) or 17 through 31 (leaving 1 through 15 for voice).*

> *Timeslot 0 is for synchronization, alarm transport, and international carrier use. It is not accessible for use for voice or data.*

> **NOTE** *Skip to **Configure the Virtual PPP Interface** on page 5 for PPP configuration.*

Configure the G.703 Interface (Optional)

1. Enter **interface e1 1/2** to activate the interface configuration mode for the DSX-1 interface.
2. Enter **multiframe ts16** to verify the G.703 interface is configured for voice signaling (timeslot 16 used for signaling).
3. Enter **no shutdown** to activate the G.703 interface.
4. Enter **exit** to return to the Global Configuration mode.

Configure the Frame Relay Virtual Interface

The following steps outline configuring a Frame Relay virtual interface (labeled 1) using a single DLCI back to the corporate router (defined as DLCI 16).

1. At the **(config)#** prompt, enter **interface fr 1** to create a Frame Relay virtual interface labeled 1.
2. If the default setting of **ansi** was changed, enter **frame-relay lmi-type ansi** to configure Frame Relay virtual interface 1 to use ANSI (Annex D) signaling.
3. Enter **no shutdown** to activate the virtual interface to pass data.
4. Enter **exit** to return to the Global Configuration mode.
5. The unit has a factory default PPP 1 interface. Enter the command **no ppp 1** to remove this interface.

Create the PVC and Assign an IP Address

1. At the **(config)#** prompt, enter **interface fr 1.16** to create a PVC assigned to Frame Relay virtual interface 1. This activates the configuration parameters for the PVC. Your prompt should now display **(config-fr 1.16)#**.
2. Enter **frame-relay interface-dlci 16** to assign DLCI 16 to this PVC.
3. Enter **ip address 192.168.72.1 255.255.255.252** to assign an IP address of 192.168.72.1 for this PVC using a 30-bit subnet mask.
4. Enter **no shutdown** to activate the virtual interface to pass data.
5. Enter **exit** to return to the Global Configuration mode.
6. If you are configuring the NetVanta for use in a Frame Relay application and have completed this step, skip to *Create the Cross-Connect* on page 5.

> **NOTE** *The default encapsulation is RFC 1490 or IETF. Make certain the remote unit uses the same encapsulation for Frame Relay.*

Configure the Virtual PPP Interface

The following steps show how to configure a PPP virtual interface (labeled 1) to the corporate router. Skip to *Create the Cross-Connect* below if you are using Frame Relay.

1. At the **(config)#** prompt, enter **interface ppp 1** to create a PPP virtual interface labeled 1.
2. Enter **ip address 192.168.72.1 255.255.255.252** to assign an IP address to the PPP endpoint using a 30-bit mask.
3. Enter **no shutdown** to activate the virtual interface to pass data.
4. Enter **exit** to return to the Global Configuration mode.

Create the Cross-Connect

1. For Frame Relay applications, at the **(config)#** prompt, enter **cross-connect 1 e1 1/1 1 frame-relay 1** to connect the E1 network connection (**e1 1/1**) to the virtual Frame Relay interface (**fr 1.16**).

   or

2. For PPP applications, enter **cross-connect 1 e1 1/1 1 ppp 1** to connect the E1 network connection (**e1 1/1**) to the virtual PPP interface (**ppp 1**).

Configure Static Routes

Routes may be assigned either statically or dynamically. Continue with this section to create a static route. Refer to the next section for information on configuring RIP and OSPF dynamic route assignments.

> **NOTE** *These examples are based on the network diagrams on page 1.*

Depending on your network setup, configure static routing on your unit in one of the following ways.

Scenario 1: Configuration for Corporate HQ router in the diagram on page 1 (Static Route to the Far Side/Internet Access at Local Site)

1. At the **(config)#** prompt, enter **ip route 10.10.20.0 255.255.255.0 ppp 1** (or **frame-relay 1.16**) to set up the static route.
2. Enter **ip route 0.0.0.0 0.0.0.0 10.10.10.x** (i.e., address of internet router) to set up the default route.

Scenario 2: Configuration for Branch Office router in the diagram on page 1 (No Internet Access at Local Site)

1. At the **(config)#** prompt, enter **ip route 0.0.0.0 0.0.0.0 ppp 1** (or **frame-relay 1.16**) to set up the default route.

2. The internet router at the far side will need a route statement to send traffic back to this network through the NetVanta router. The information (based on the diagram shown at the beginning of this document) is as follows:
   - Destination address: 10.10.20.0 (remote LAN)
   - Subnet mask: 255.255.255.0
   - Gateway: 10.10.10.1 (NetVanta Router's Ethernet)

Configure Dynamic Routes

Scenario 1: Dynamic Routing via OSPF

1. At the **(config)#** prompt, enter **router ospf** to activate the OSPF configuration mode. Your prompt should now display **(config-ospf)#.**
2. Specify the networks:

   Corporate HQ Router
   (config-ospf)**#network 10.10.10.0 0.0.0.255 area 0**
   (config-ospf)**#network 192.168.72.0 0.0.0.3 area 0**
   Branch Office Router
   (config-ospf)**#network 10.10.20.0 0.0.0.255 area 0**
   (config-ospf)**#network 192.168.72.0 0.0.0.3 area 0**
3. Enter **exit** to return to the Global Configuration mode.

Scenario 2: Dynamic Routing via RIP

1. At the **(config)#** prompt, enter **router rip** to activate the RIP configuration mode. Your prompt should now display **(config-rip)#**.
2. Enter **version 2** to globally define RIP version 2 on all interfaces.
3. Specify the networks:

   Corporate HQ Router
   (config-rip)**#network 10.10.10.0 255.255.255.0**
   (config-rip)**#network 192.168.72.0 255.255.255.252**
   Branch Office Router
   (config-rip)**#network 10.10.20.0 255.255.255.0**
   (config-rip)**#network 192.168.72.0 255.255.255.252**
4. Enter **exit** to return to the Global Configuration mode.

Set the Enable Security Mode Password

1. Verify that the prompt of your unit displays **(config)#**.
2. Enter **enable password word** to set the Enable Security mode password.

   or

3. Enter **enable password md5 word** to encrypt the enable password using MD5 encryption.

> NOTE *The Enable Security mode passwords are case sensitive.*

Configure Telnet Access

The following steps show how to access the Telnet configuration parameters and change the password. The default password for initializing a Telnet session is **password** (all lowercase). For security purposes, change the password to something unique. For this example, replace the underlined **word** with a password of your choosing. The NetVanta supports five Telnet sessions (0 through 4).

1. Verify that the prompt of your unit displays **(config)#**.
2. Enter **line telnet 0 4** to change the configuration parameters for the Telnet session.
3. Enter **login** to initiate Telnet access.
4. Enter **password word** to change the login password for the Telnet session.
5. Enter **exit** to return to the Global Configuration mode.

> NOTE
>
> *An enable security mode password and the Ethernet port parameters must be defined before configured Telnet sessions are activated. Refer to* ***Configure the Ethernet Port Parameters*** *on page 2 and* ***Set the Enable Security Mode Password*** *on page 6 for information.*

Save the Configuration

1. Verify that the prompt of your unit displays **(config)#**.
2. Enter **exit** to leave configuration mode.
3. Enter **copy running-config startup-config** to save the current configuration to memory. This command may be abbreviated as **copy run start**.
4. Enter **exit** to close the configuration session.

Complete the Installation

The NetVanta is now configured and operational. Complete the installation by connecting the appropriate cables to the E1 and Ethernet networks. Please refer to your *NetVanta Hardware Installation Guide* for more details on pinouts and cabling.